Autodesk

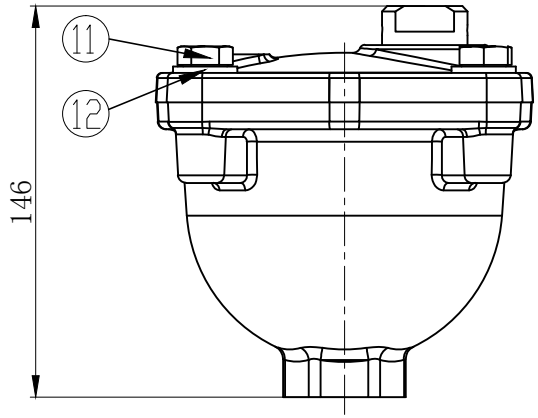

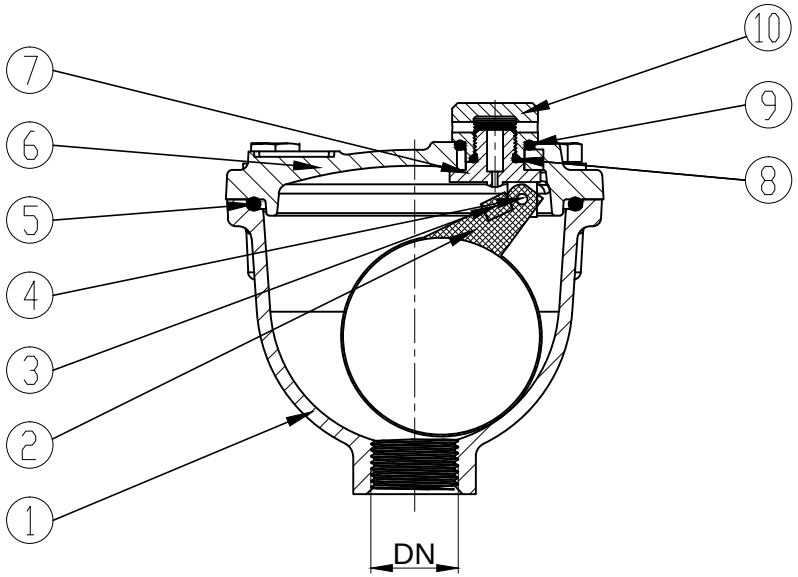

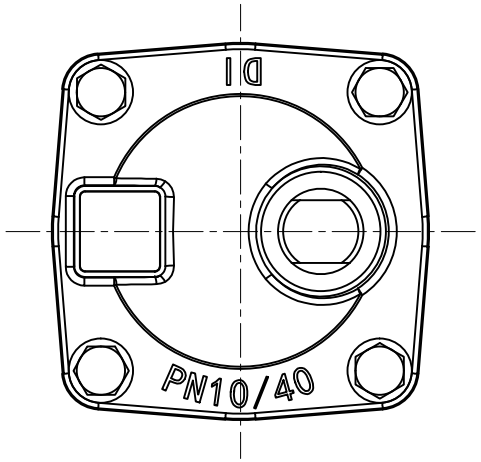

Connect		BSPP
Tests		EN 12266-1
Reference Standard		
Medium		Water
Temperature		0-80°C
Seal Test		11/18 Bar
Body Test		15/25 Bar
PN		10/16 Bar
DN		DN25-DN50
Main Technical Parameters		
12	Washer	AISI304 STAINLESS STEEL
11	Bolt	AISI304 STAINLESS STEEL
10	Cap	BRASS
9	O Ring	NBR
8	O Ring	NBR
7	Bracket	BRASS
6	Bonnet	DUCTILE IRON
5	O Ring	NBR
4	Hinge Pin	AISI304 STAINLESS STEEL
3	Seat	EPDM
2	Float	ABS
1	Body	DUCTILE IRON
No.	Name	Materials

Assembly Drawing

Shanxi Solid Industrial Co.,Ltd.

TOLERANCE LEVELS TO ISO SUBJECT TO CHANGE WITHOUT PRIOR NOTICE

Trace Exhaust Valve

Autodesk
Autodesk
Autodesk